KEB

3~⅄/⅄⅄

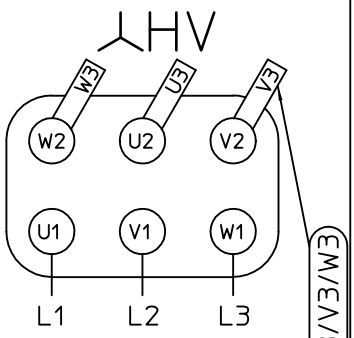

(400V-50Hz/460V-60Hz)

Relocate lead wire U3/V3/W3

wire name	wire color	terminal bolt	wire name	wire color	terminal bolt
U1	RD	U1	U3*	RD	U2
V1	WH	V1	V3*	WH	V2
W1	BK	W1	W3*	BK	W2
U2	RD	U2			
V2	WH	V2			
W2	BK	W2			

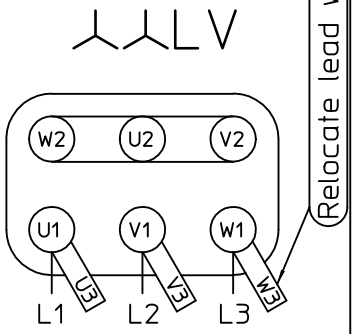

(200V-50Hz/230V-60Hz)
(400V-100Hz/460V-120Hz)

wire name	wire color	terminal bolt	wire name	wire color	terminal bolt
U1	RD	U1	U3*	RD	U1
V1	WH	V1	V3*	WH	V1
W1	BK	W1	W3*	BK	W1
U2	RD	U2			
V2	WH	V2			
W2	BK	W2			

* Ringkabelschuh verwenden
(use ring cable lug)

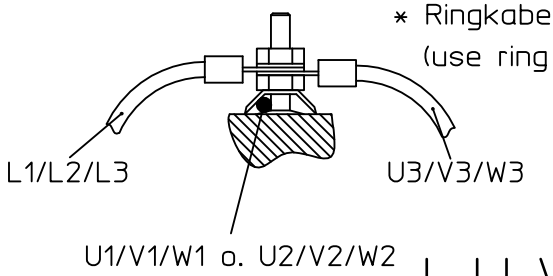

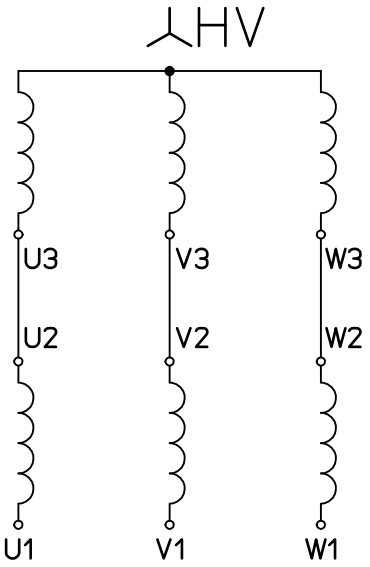

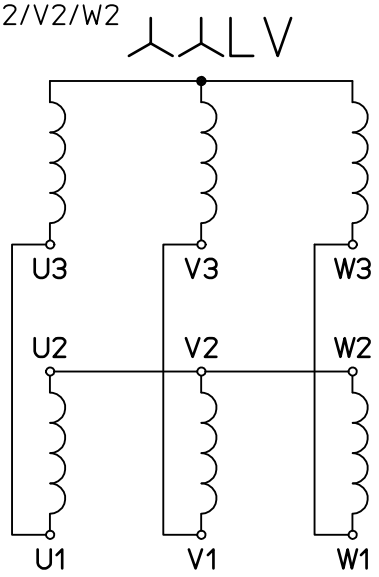

GZ00X000037